Table ∅700, pedestal frame 540 - lever

Article no. 50312x6

Scale: 1:10

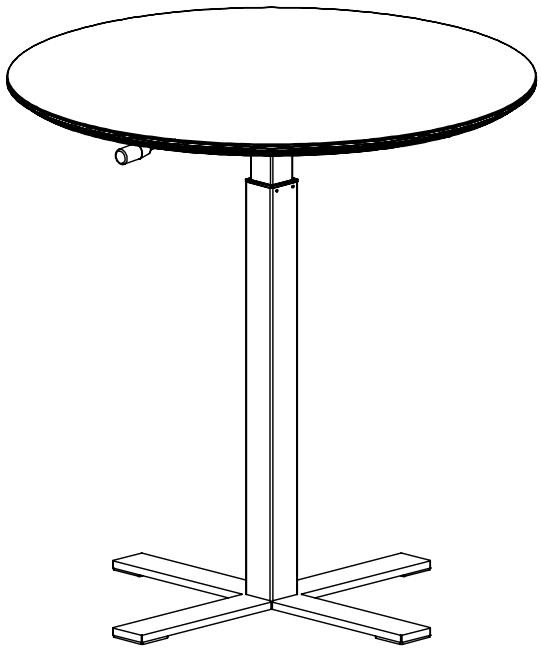

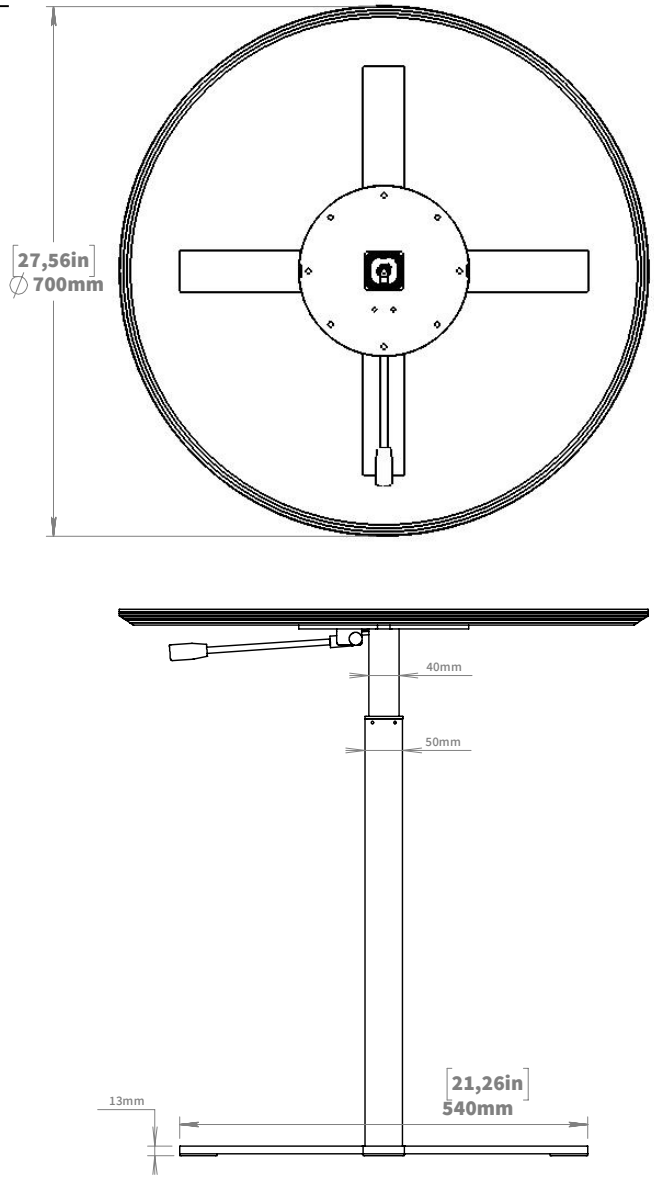

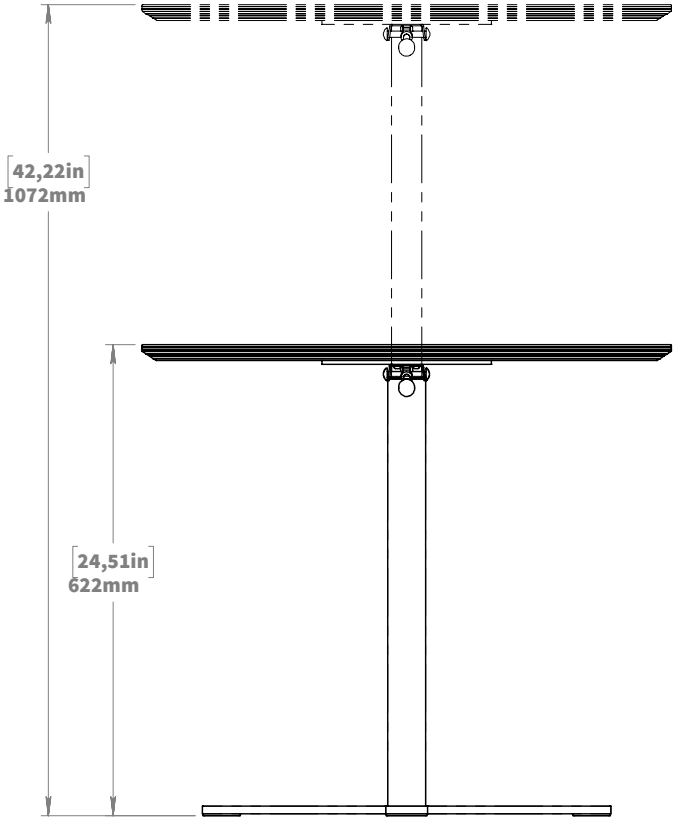

SWEDSTYLE

www.swedstyle.com